Technical data sheet
T 60, plug-in seal

The junction boxes are made of a thermoplastic polypropylene polymer with plug-in seals made of ethylene vinyl acetate (EVA). This allows installation of cables either directly through the 7 x M25 seals, or the seals can be cut with a knife at the pre-marked points, in order to create an insertion opening for cables or pipes. Alternatively, cable glands can be pushed through the openings instead of the seals and locked with a locknut from the inside.
The junction boxes can be mounted on mounting plates in the openings on the floor using steel screws 3.5 x 9.5.
Clear internal dimensions: 100 x 100 x 48 mm
Cover with labelling panel and lead-sealed.

Standard version: flame-resistant, testing temperature 650 °C.
F version: highly flame-resistant, testing temperature 960 °C.

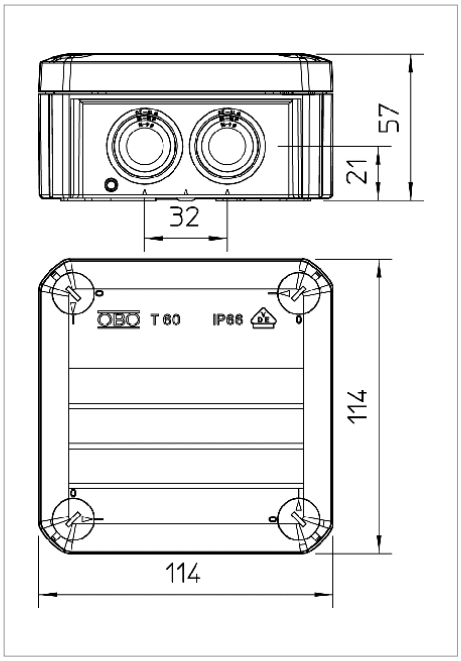

Type	Version	Entries	Colour	Box quantity	Pack. pcs	Weight kg/100 pcs.	Art.-No.
T 60	Standard	7 x M25	Light grey; RAL 7035	60	5	12.300	2007061
T 60 RW		7 x M25	Pure white; RAL 9010	60	5	12.300	2007525
T 60 F	960 °C flame-resistant	7 x M25	Light grey; RAL 7035	60	5	12.300	2007339
T 60 RO-LGR	With red cover	7 x M25	Red grey	60	5	12.300	2007638
T 60 UV RW	UV-resistant	7 x M25	Pure white; RAL 9010	60	5	12.300	2007412
T 60 KL	With terminal strip	7 x M25	Light grey; RAL 7035	60	5	16.700	2007434

PP Polypropylene

E /100 pc.

IP 66 | M25 | 6 mm² | 7 | 500 V

650°

Legend

- Protection rating IP 66
- M25 entry
- Nominal cross-section 6 mm²
- 7 cable entries
- Nail device
- Nominal voltage 500 V
- Communautés Européennes, EC declaration of conformity according to EC directives
- Verband der Elektrotechnik, Elektronik, Informationstechnik e.V., Germany
- Halogen-free; without chlorine, fluorine and bromine
- Flame resistant 650 °C